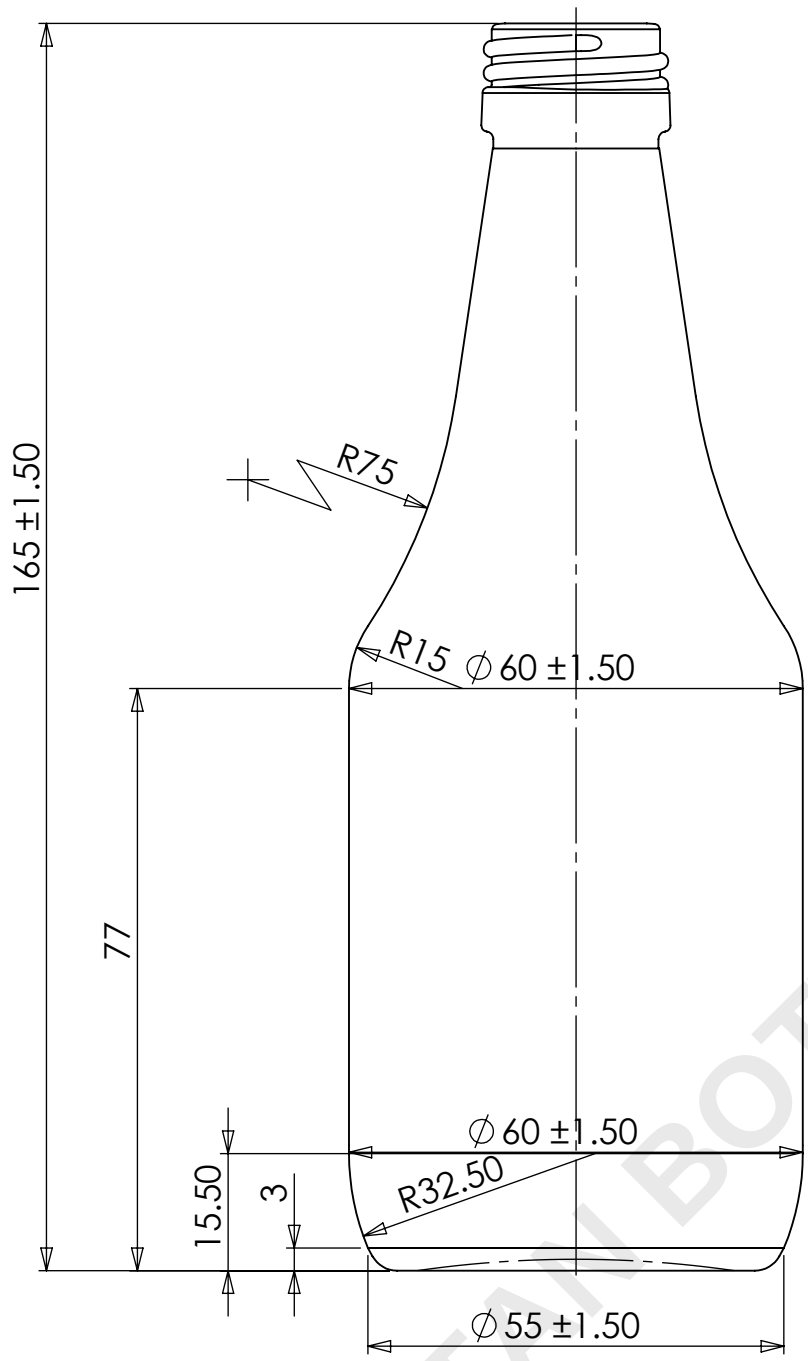

FRONT VIEW

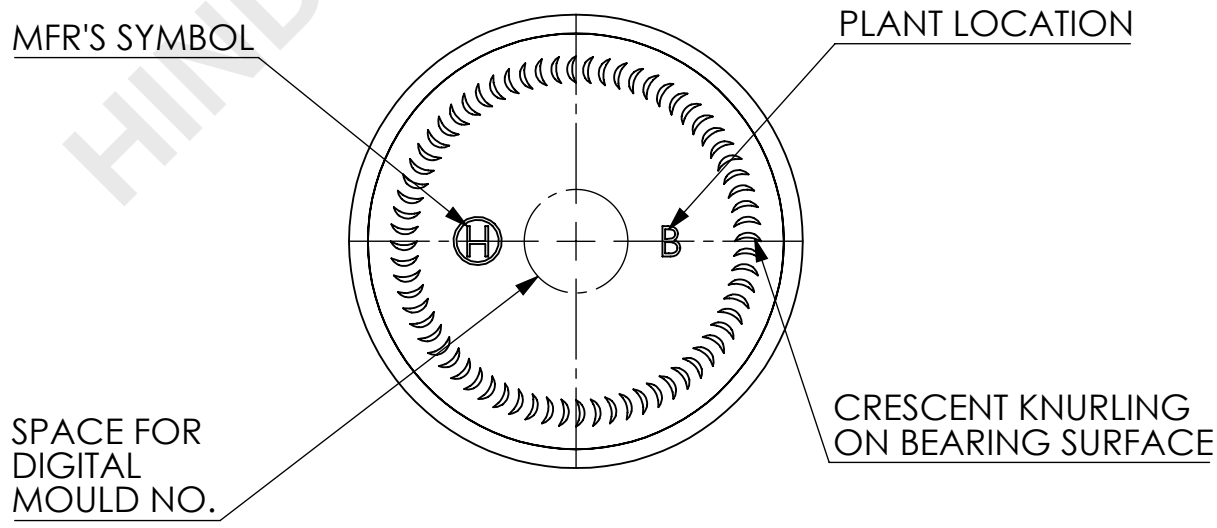

BOTTOM VIEW

ALL DIMENSIONS ARE IN MILLIMETERS

HINDUSTAN BOTTLES

PROCESS	**B&B**								
MINIMUM THROUGH BORE	–								
FILL POINT VERIFIED	-								
TILT ANGLE	–		**No.**	**REV.No.**	**REVISION**	**DATE**	**CHK**	**DRC**	
MAXIMUM DEPTH OF STANDARD ENGRAVING	–	**FILL-POINT**			-				
MAX. GAS VOLUMES	–	**BRIMFUL CAP.**			**227± 7ML.**				
REF DRG No :- CD-4108		**WEIGHT**			**175.0 ± 12.0 GMS.**				
MOULD EQUIPMENT ORDERED BY		**FINISH**			**25 MM R.S.P.P. STD.**	**COLOUR**	**FLINT**		
PLANT	**B**	**SURFACE TREATMENT**			**NO**	**C.C. NO.-42530**			

SPECIFICATION AGREEMENT ARE BASED ON TOLERANCED DIMENSIONS ONLY
DO NOT SCALE DRAWING
COPYRIGHT RESERVED. NOT TO BE COPIED IN WHOLE OR PART WITHOUT WRITTEN PERMISSION FROM H.N.G.& I. LTD.

HINDUSTHAN NATIONAL GLASS & IND. LTD.

TITLE	200 ML NEW HEAM UP TONIC		
CUST	--		
DRN	ANIL	**DR. DT.**	17.05.2003
CHK.		**CHK. DT.**	
APPD.		**APPD. DT.**	

DRAWING No. **42530**

A4

REV.